Rev.	Date	Refer.	Changes
A	2018-03-29	AnN	Bearing seat Ø68 tolerance changed to M6 -0.005/-0.020

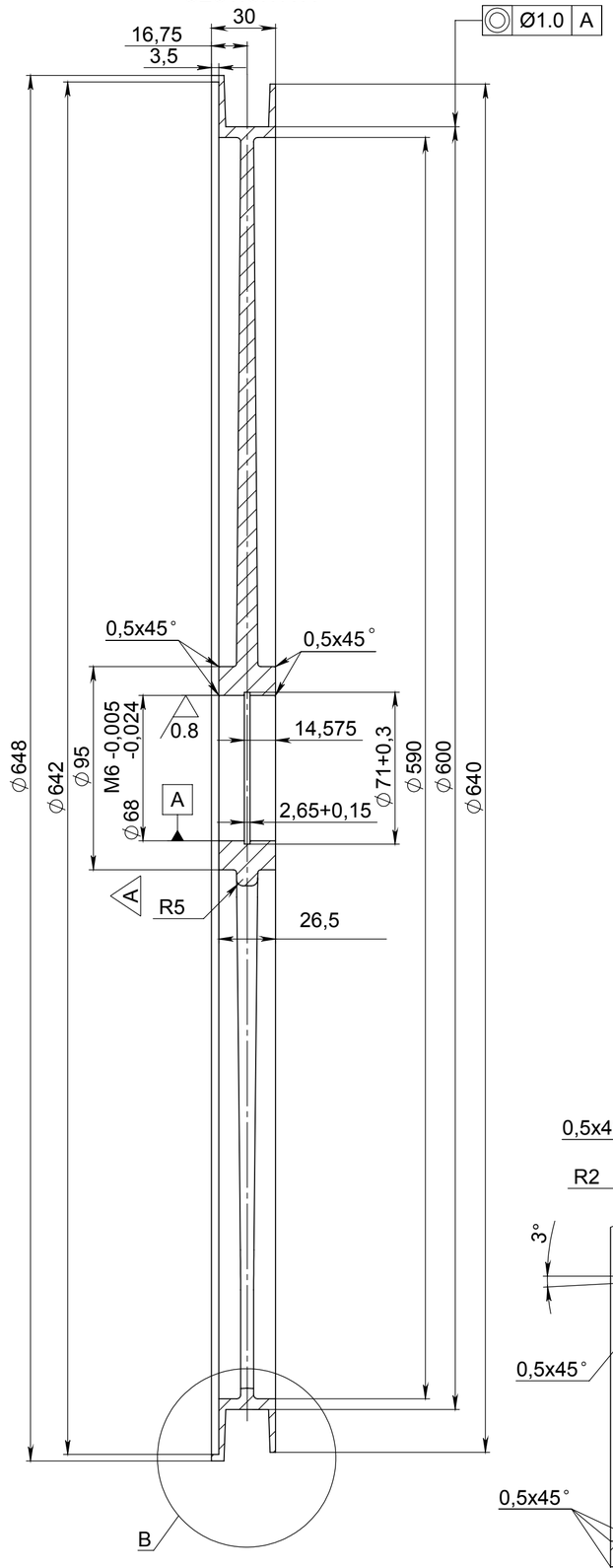

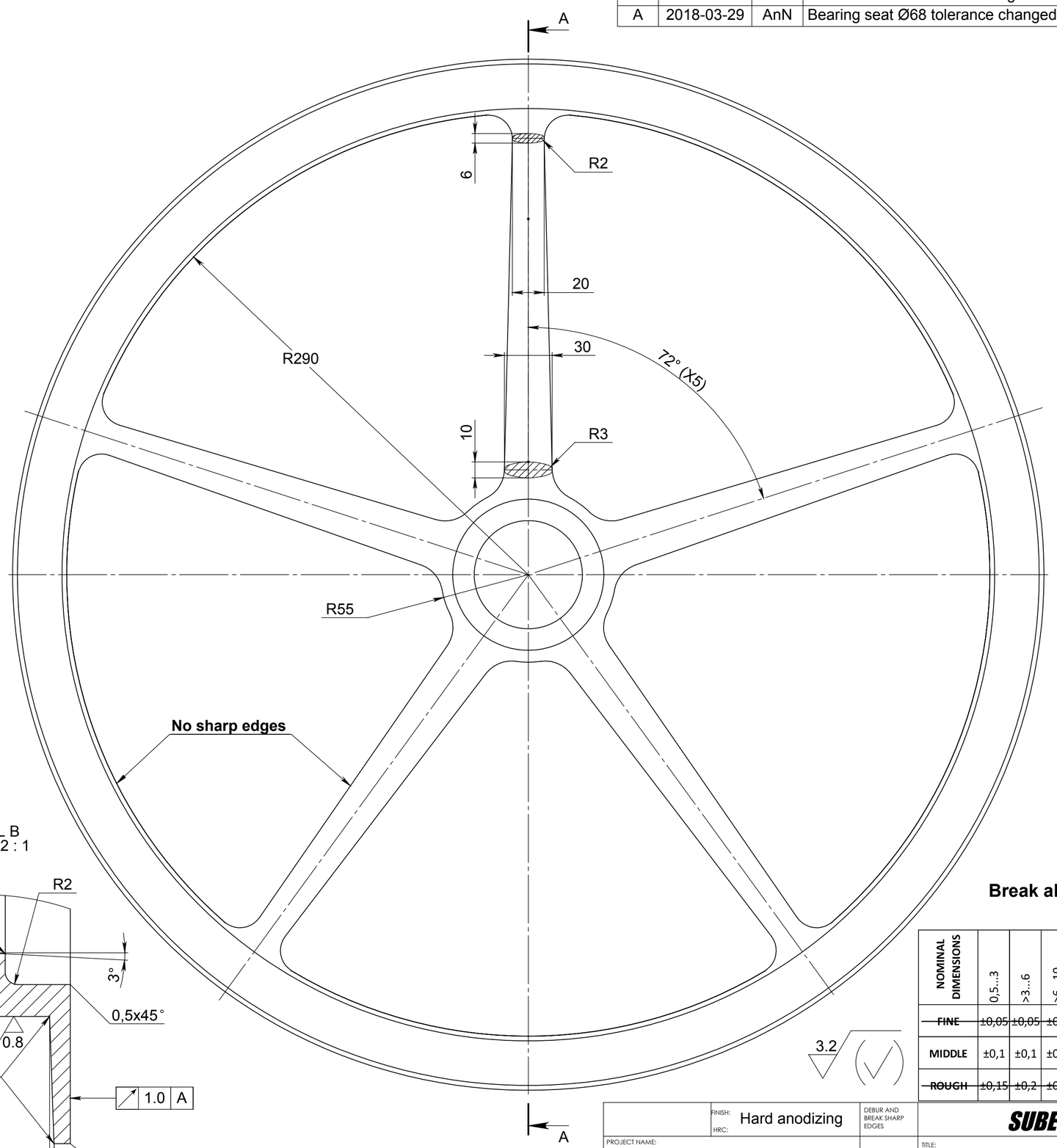

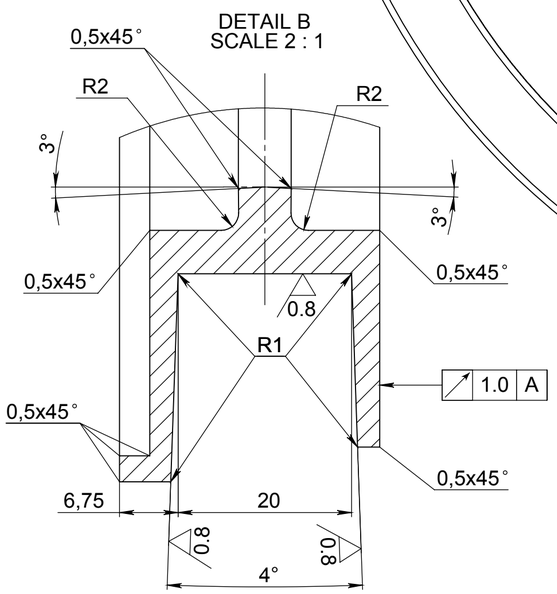

Break all sharp edges!

NOMINAL DIMENSIONS	0,5...3	>3...6	>6...10	>30...120	>120...315	>315...1000	>1000...2000
~~FINE~~	~~±0,05~~	~~±0,05~~	~~±0,1~~	~~±0,15~~	~~±0,2~~	~~±0,5~~	~~±0,5~~
MIDDLE	±0,1	±0,1	±0,2	±0,3	±0,5	±0,8	±1,2
~~ROUGH~~	~~±0,15~~	~~±0,2~~	~~±0,3~~	~~±0,8~~	~~±1,2~~	~~±2~~	~~±3~~

3.2

FINISH: Hard anodizing
HRC:
DEBUR AND BREAK SHARP EDGES

SUBEC AB

PROJECT NAME:
PROJECT NO:

	NAME	SIGNATURE	DATE
DRAWN	AnN		2018-03-29

TITLE:
Wheel D600,
hard anodized

MATERIAL: Casted Aluminium
ARTICLE NO: 3366A
DWG NO. 3-400337-00_3366A
A2
Q.A
WEIGHT: 2.58 kg
SCALE:1:2
SHEET 1 OF 1
3-400312-00_3366