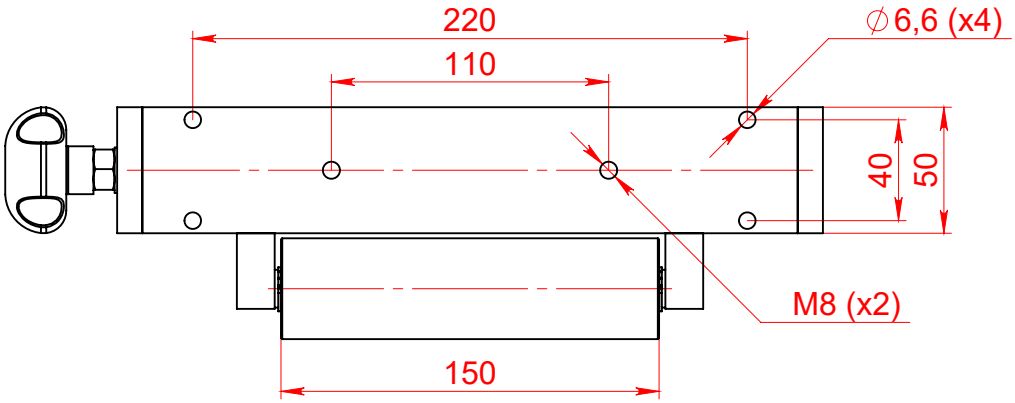

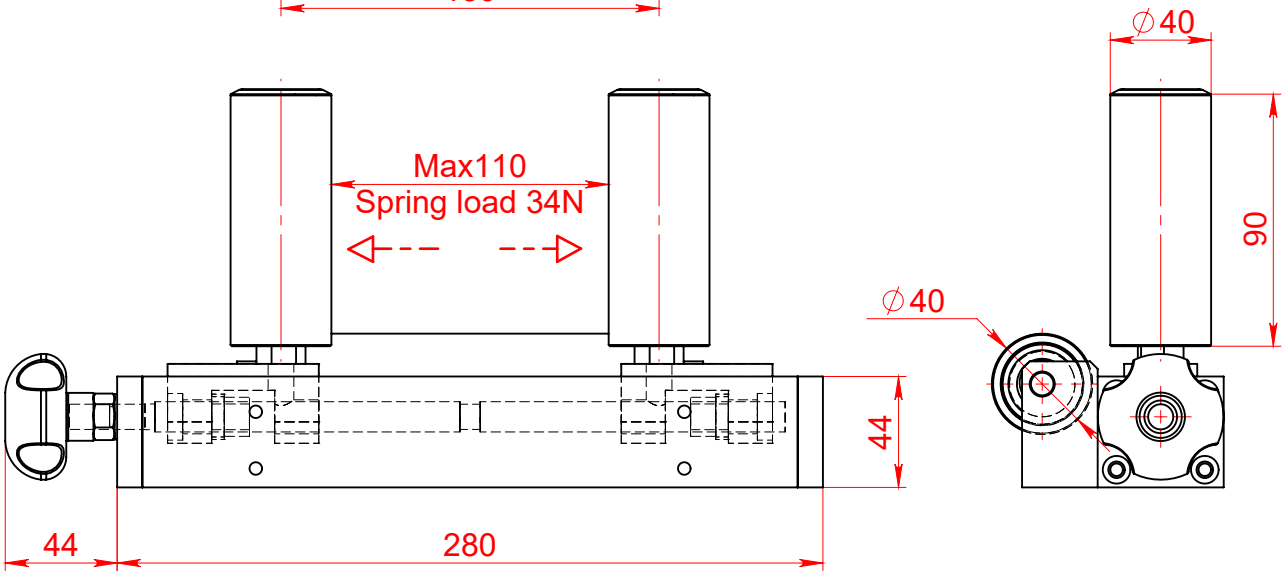

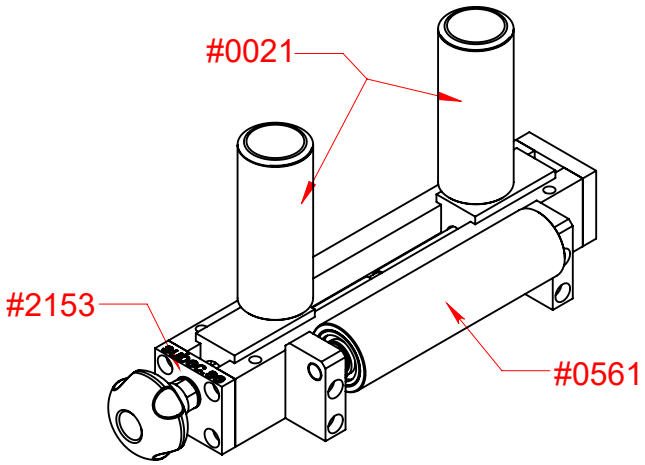

RL (Right to Left)

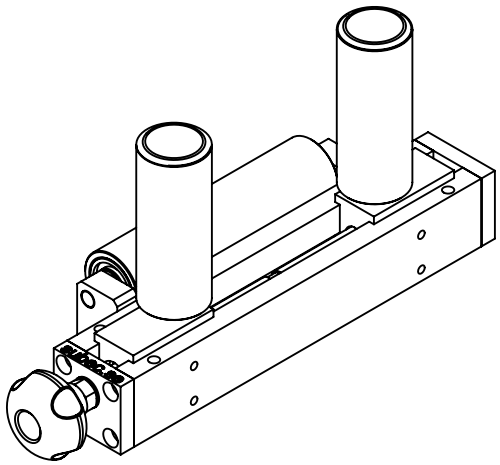

LR (Left to Right)

UNLESS OTHERWISE SPECIFIED: DIMENSIONS ARE IN MILLIMETERS SURFACE FINISH: TOLERANCES: LINEAR: ANGULAR:	FINISH: HRC:	DEBUR AND BREAK SHARP EDGES	DO NOT SCALE DRAWING / REVISION SUBEC AB
PROJECT NAME:			TITLE: Adj.Guide Roll.D40 L90 Hor.D40 L150 HRX
PROJECT NO:			
	NAME / SIGNATURE / DATE		
DRAWN	EIL / 2018-09-27		
MATERIAL:	ARTICLE NO: 5831		DWG NO. 3-400440-00 / A4
Q.A	WEIGHT: g		SCALE:1:3 / SHEET 1 OF 1 / 11537