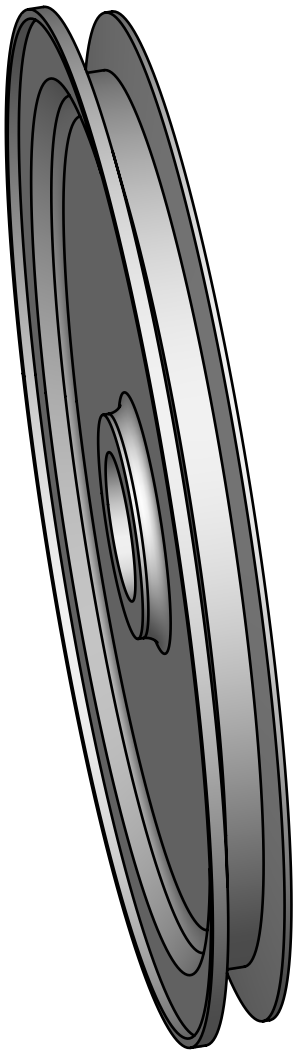

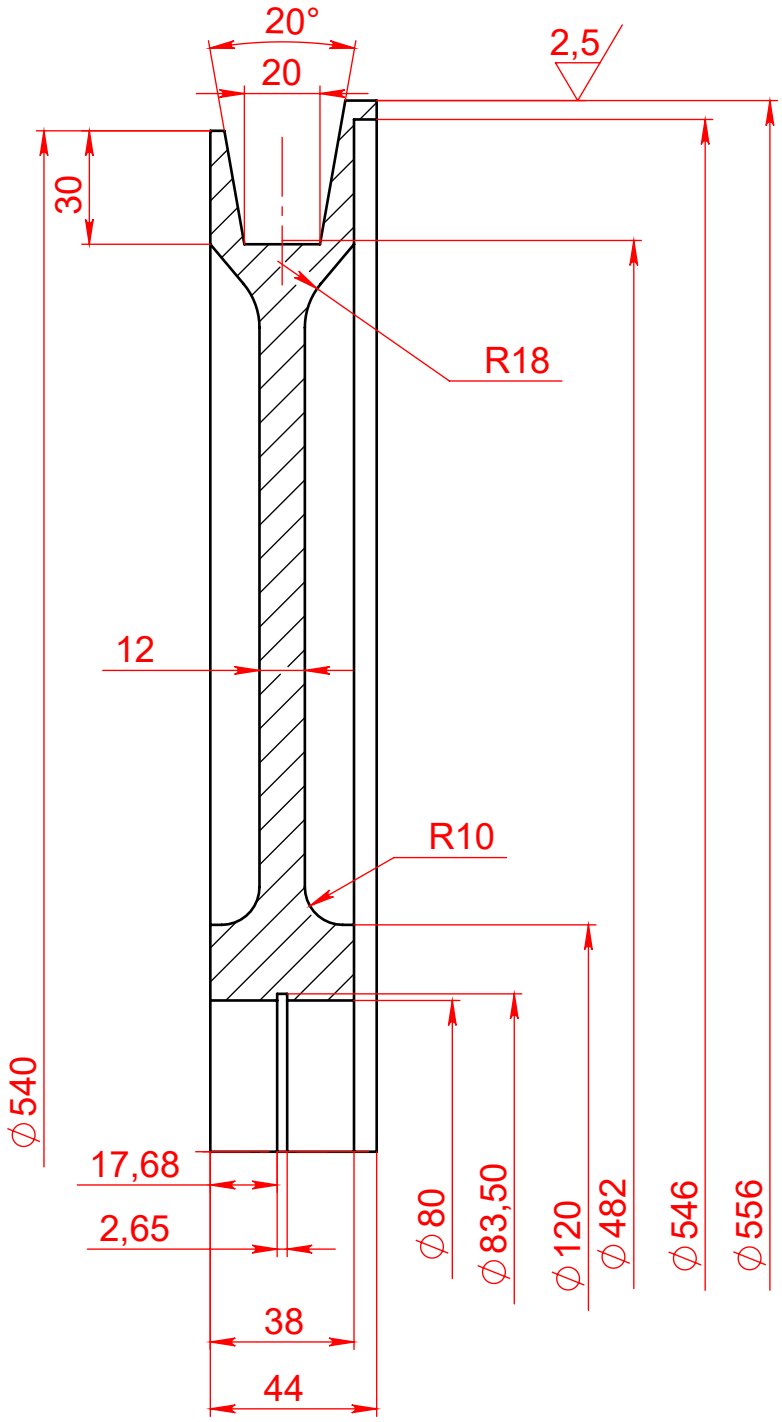

UNLESS OTHERWISE SPECIFIED: DIMENSIONS ARE IN MILLIMETERS SURFACE FINISH: TOLERANCES: LINEAR: ANGULAR:	FINISH: HRC:	DEBUR AND BREAK SHARP EDGES 1x45 °	DO NOT SCALE DRAWING SUBEC AB
PROJECT NAME:			TITLE: Whell in PUR Integral-hard ØD=500
PROJECT NO:			
	NAME / SIGNATURE / DATE		
DRAWN	2025-08-07		
MATERIAL: PUR	ARTICLE NO: 1448	DWG NO. 1-400332-00	A4
Q.A	WEIGHT:	SCALE:1:5	SHEET 1 OF 2 — 1448